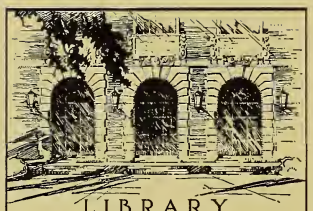

LIBRARY
OF THE
UNIVERSITY
OF ILLINOIS
621.365
Il655te
no. 31-36
cop. 2

~~ENGINEERING~~

The person charging this material is responsible for its return to the library from which it was withdrawn on or before the **Latest Date** stamped below.

Theft, mutilation, and underlining of books are reasons for disciplinary action and may result in dismissal from the University.

UNIVERSITY OF ILLINOIS LIBRARY AT URBANA-CHAMPAIGN

APR 18 1976

MAR 28 1976

L161—O-1096

ANTENNA LABORATORY

Technical Report No. 33

A UNIDIRECTIONAL EQUIANGULAR SPIRAL ANTENNA

by

John D. Dyson

10 July 1958

Contract AF33(616)-3220
Project No. 6(7-4600) Task 40572
WRIGHT AIR DEVELOPMENT CENTER

Electrical Engineering Research Laboratory
Engineering Experiment Station
University of Illinois
Urbana, Illinois

21.365
655te
.33
p.2

Engin

CONTENTS

	Page
Illustrations	iii
Summary	1
Introduction	2
The Antenna	5
Experimental Results	10
Input Impedance	16
Conclusions	19
Acknowledgements	19
Distribution List	

Digitized by the Internet Archive
in 2013

http://archive.org/details/unidirectionaleq33dyso

ILLUSTRATIONS

Figure Number		Page
1.	The Planar Equiangular Spiral Antenna	3
2.	The Balanced Conical Antenna with Coordinate System	6
3.	Antenna As Etched on Teflon Impregnated Cloth and As Assembled with RG 141/U Cable	8
4.	Antennas with Variation in Arm Width and Feed Cable	9
5.	Radiation Patterns as a Function of ψ	11
6.	Radiation Patterns of Balanced Conical Equiangular Spiral at Mid-Band Frequencies, $\psi = 20^{\circ}$	12
7.	Radiation Patterns of Balanced Conical Equiangular Spiral, $\psi = 30^{\circ}$	14
8.	Polarization of Radiated E Field off Axis of Antenna	15
9.	Standing Wave Ratio on 5 ohm Line Terminated with Balanced Conical Antenna	17
10.	Approximate Boundary Circles of Impedance Loci as a Function of ψ	18

1. SUMMARY

Circularly polarized unidirectional radiation over essentially unlimited bandwidths is obtainable with a single antenna. The antenna is constructed by wrapping a balanced equiangular spiral on a conical surface. The non-planar structure so constructed retains the desirable qualities of the planar models and in addition, provides a single lobe pattern off the apex of the cone. Practical antennas have been constructed with radiation patterns and input impedance essentially constant over bandwidths greater than 10 to 1.

2. INTRODUCTION

The equiangular spiral antenna originally proposed by Rumsey[1] was demonstrated to be the first of the essentially "frequency independent" structures[2]. This antenna defined by the equation for the equiangular spiral curve, as in Fig. 1, was a balanced planar structure. For all frequencies such that the arm lengths are greater than one wavelength, it provides radiation patterns that, except for a rotation about the axis of the antenna, are essentially constant with frequency and an input impedance that has converged to a characteristic value. The radiation pattern is bidirectional with two circularly polarized lobes perpendicular to the plane of the antenna. Practical size structures have been constructed with pattern and impedance bandwidths greater than 20 to 1.

Carrel investigated an unbalanced conical version of this antenna fed with the apex of the cone at a ground plane,[3] and demonstrated the basic unlimited bandwidth of this structure. The unbalanced antenna exhibited a tilt of the radiation pattern off the antenna axis and since the pattern had the characteristic rotation with frequency the structure was of limited use. The balanced model he investigated was fed through a ground plane with the apex of the cone on the ground plane. The patterns did not appear encouraging.

In the spring of 1957 the author investigated several balanced expanded and conical structures, alone and in combination with planar structures.[4]

---

1. Rumsey, V.H., "Frequency Independent Antennas", National IRE Convention Record, 1957.
2. Dyson, J.D., "The Equiangular Spiral Antenna," Paper submitted to IRE for publication, 11 June 1958.
3. Carrel, R.L., "Experimental Investigation of the Conical Spiral Antenna", Technical Report No. 22, 25 May 1957 Antenna Laboratory, University of Illinois, Contract AF 33(616)3220.
4. Dyson, J.D., "The Equiangular Spiral Antenna". Technical Report No. 21, 15 Sept. 1957, Antenna Laboratory, University of Illinois, Contract AF 33(616)3220.

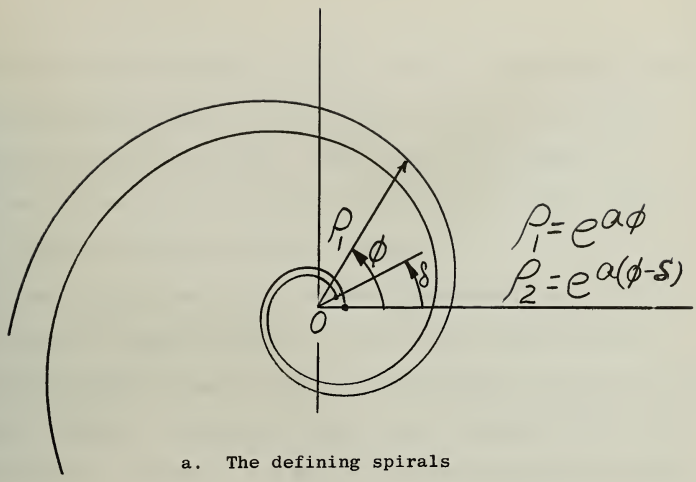

a. The defining spirals

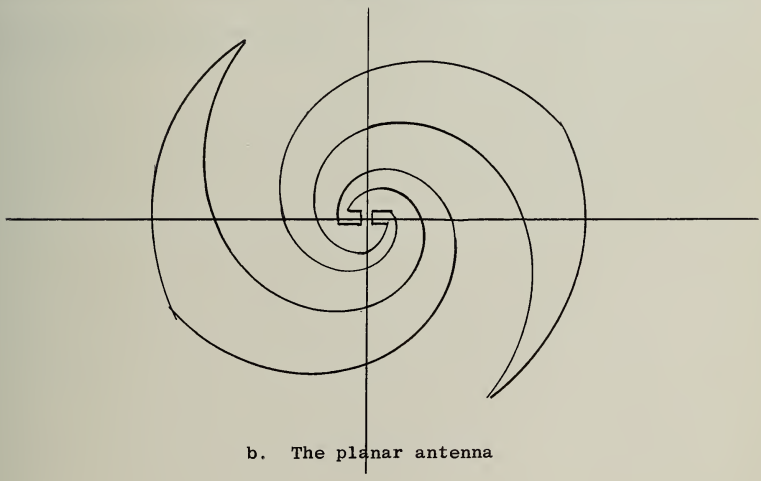

b. The planar antenna

FIGURE 1 THE PLANAR EQUIANGULAR SPIRAL ANTENNA.

Although these antennas appeared to have promise the investigation was temporarily suspended because of the problems involved in precisely constructing the non-planar models. Since that time equipment for constructing "printed circuit antennas" has become available, making possible a simple and precise method of construction.

This paper is concerned with a balanced equiangular spiral wrapped on the surface of a cone and fed at the apex of the cone by carrying the coaxial feed cable along one arm. It demonstrates that unidirectional rotationally symmetric radiation patterns, with a maximum on the antenna axis off the apex of the cone, can be obtained over bandwidths matching those of the basic planar antenna.

3. THE ANTENNA

Design principles for the planar structure of Fig. 1 are given in a previous paper.[2,4] The conical spiral structure is defined as in Fig. 2. The radial distance along the surface of the cone to the outer edge of one arm is given by

$$\rho_1 = e^{(a \sin \frac{\psi}{2})\phi} = e^{b\phi}$$

The inner edge is defined by

$$\rho_2 = e^{b(\phi-\delta)} = K \rho_1$$

The second arm by

$$\rho_3 = \rho_1 e^{-a\pi}$$

and

$$\rho_4 = K \rho_3$$

Hence for an included cone angle, ψ, of 180° (the planar structure) the antenna is defined by

$$\rho_1 = e^{a\phi}$$

and as this antenna is wrapped on a cone it spirals more rapidly. This rate of spiral is given by the exponent "a sin $\frac{\psi}{2}$". The "angular width" of the arm is specified by the constant K. The previous investigation of the planar antenna indicated that except for the fact that the more tightly wound antennas had somewhat smoother and slightly more rotationally symmetric patterns, the rate of spiral rotation had little effect on the shape of the pattern and a secondary effect on the input impedance.

The non-planar antennas were constructed by drawing the arms on the development of a cone. This drawing is transferred by a silk screen process

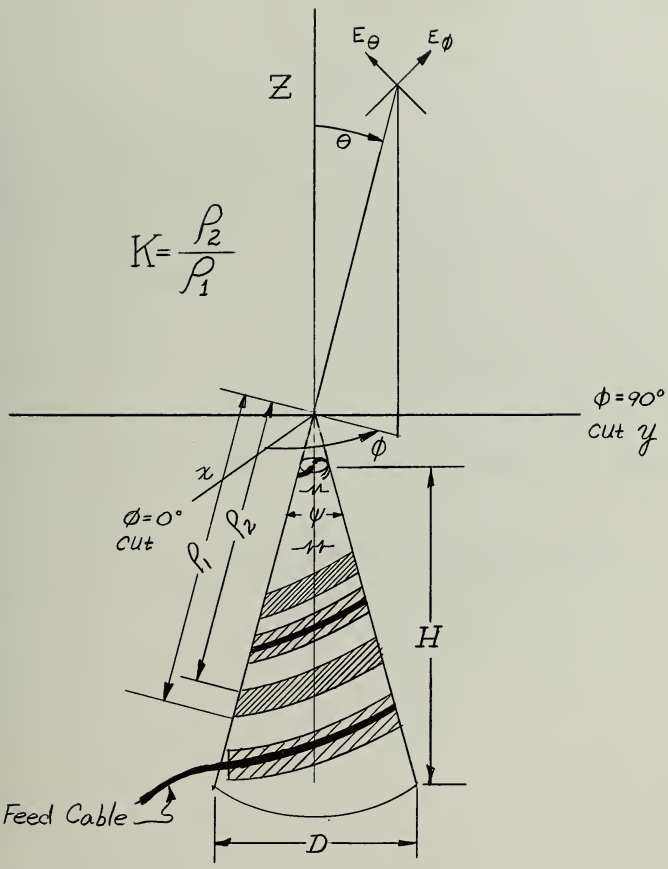

FIGURE 2 THE BALANCED CONICAL ANTENNA WITH COORDINATE SYSTEM

to a 2 mil copper clad teflon impregnated glass cloth .010 inches in thickness.[5] After etching the metal arms, the base material was formed into a cone and the arms soldered along the joint. Figures 3 and 4 show the antenna as printed and the completed structure. The teflon cone is supported by a cone turned from block styrofoam.

The arms must be terminated a finite distance from the cone apex and are fed in a balanced manner by carrying the feed cable along one arm. This method of feed[2,4] is possible because of the rapid attenuation of the near fields on the arms, and for frequencies such that these fields have attenuated to negligible values at the arm ends, the outside of the cable does not carry a significant amount of antenna current. However, as the frequency of operation is decreased a point will be reached where the presence and location of this cable alters the radiation pattern. A dummy cable is placed on the opposite arm to maintain physical symmetry.

The properties of the antenna were investigated as a function of arm width, and cone angle ψ.

---

5. Continental Diamond Fibre, "Dilecto", type No. GB112T.

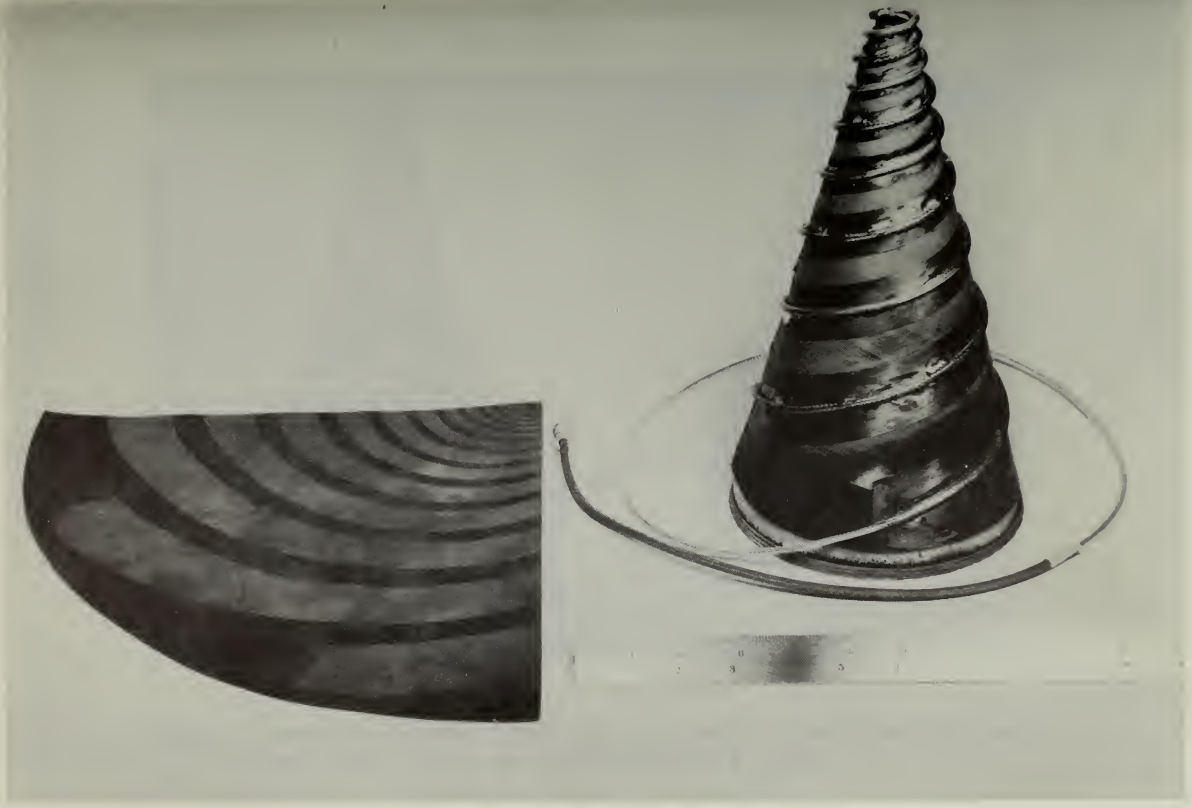

FIGURE 3 ANTENNA AS ETCHED ON TEFLON IMPREGNATED CLOTH AND AS ASSEMBLED WITH RG 141/U CABLE.
($K = .85$, $\psi = 30^{\circ}$, $L = 92$ cm)

a. b.

FIGURE 4 ASSEMBLED ANTENNAS $\psi = 30^{\circ}$; (a) K = .85, b = .078 FED WITH "MICRODOT" CABLE. (b) ARMS OF RG 141/U CABLE ONLY, b = .078.

4. EXPERIMENTAL RESULTS

Initially, a planar antenna defined by the constants a = .303, and K = .925, with arms 150 cm in length was constructed. The effect on the radiation pattern of wrapping this antenna on a conical surface is indicated in Fig. 5. There is a marked increase in front to back ratio for ψ smaller than 60°. The absence of back radiation for $\psi = 20^{\circ}$ is evident in Fig. 6. There is no basic tilt to the pattern and the lobe is rotationally symmetric. The pattern rotates with frequency but this rotation is masked in the symmetrical structure since the pattern beamwidth is independent of the angle ϕ. The beamwidth of the patterns at 2000 mc. in Fig. 6 is $70^{\circ} \pm 2^{\circ}$ for E_{θ} polarization and $90^{\circ} \pm 3^{\circ}$ for E_{ϕ} polarization for any angle ϕ. The average beamwidths of the same antenna on a 30° cone are approximately 80° and 100°.

The lowest useable frequency is determined by the arm width and length, and cone diameter. The upper limit is determined by the precision of construction at the apex. For a termination of the apex at a one inch diameter the upper limit is approximately 4500 mc. The effect of arm width is evident in Table 1.

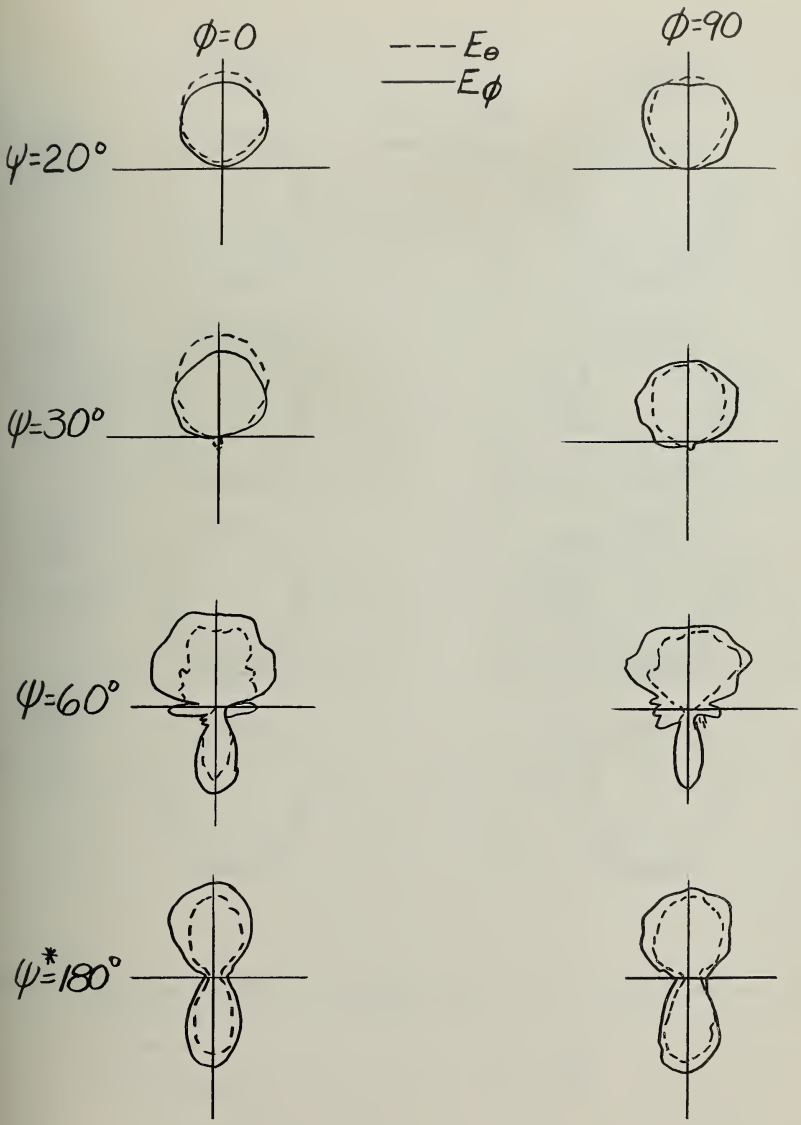

FIGURE 5 RADIATION PATTERNS AS A FUNCTION OF ψ

K = .925 b = (.303 sin $\frac{\psi}{2}$)
L = 150 cm f = 2000 MC

* unsymmetry in front and back lobe at $\psi = 180^{\circ}$ due to mount

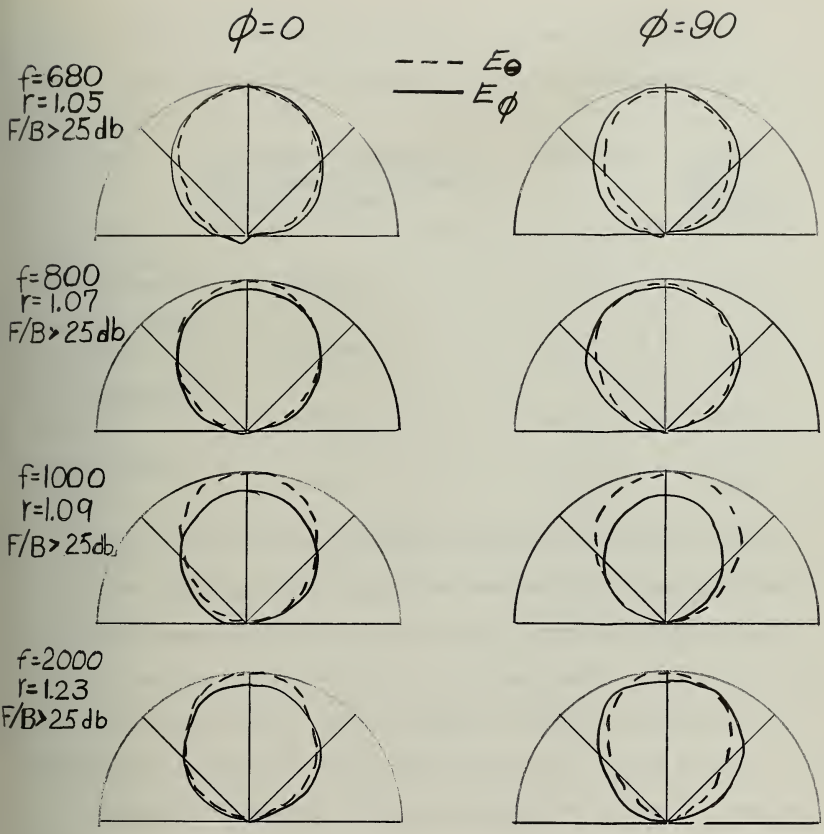

FIGURE 6 RADIATION PATTERNS OF BALANCED CONICAL EQUIANGULAR SPIRAL AT MID-BAND FREQUENCIES.

L = 150 cm	b = .053
D = 16.6 cm	K = .925
r = axial ratio	$\psi = 20^{\circ}$

Table 1 Effect of arm width on patterns at lower frequencies of operation, $\psi = 30^{\circ}$, Arm length 92 cm, Cone Diameter 15 cm.

ARM WIDTH	APPROXIMATE FREQUENCY AT WHICH FRONT TO BACK RATIO BECOMES CONSTANT	ARM LENGTH	MAXIMUM CONE DIAMETER
.050" (micro-dot cable only)	1000 MC	3.1 λ	.5 λ
.140" (RG 141/U cable only)	1000 MC	3.1 λ	.5 λ
K = .925 (with RG 141/U)	900 MC	2.7 λ	.45 λ
K = .85 (with RG 141/U)	750 MC	2.3 λ	.38 λ

It is of interest that antennas constructed of narrow, constant width arms, actually consisting of the feed cable only, had acceptable patterns although they did not have as low a frequency capability for any given antenna size as the wider, true equiangular spiral structures.

For ψ of 20° and K = .925 the front to back ratio appeared to be approximately constant for frequencies such that L = 3.25 λ and D = .35 λ.

The bandwidth potentialities are demonstrated in Fig. 7. The 10 to 1 band can be extended by a suitable increase in arm length. This extension leaves the pattern at the higher frequencies unchanged. The polarization of the field off the axis, shown in Fig. 8, is approximately circular for more than $\pm 60^{\circ}$ off-axis at mid-band frequencies.

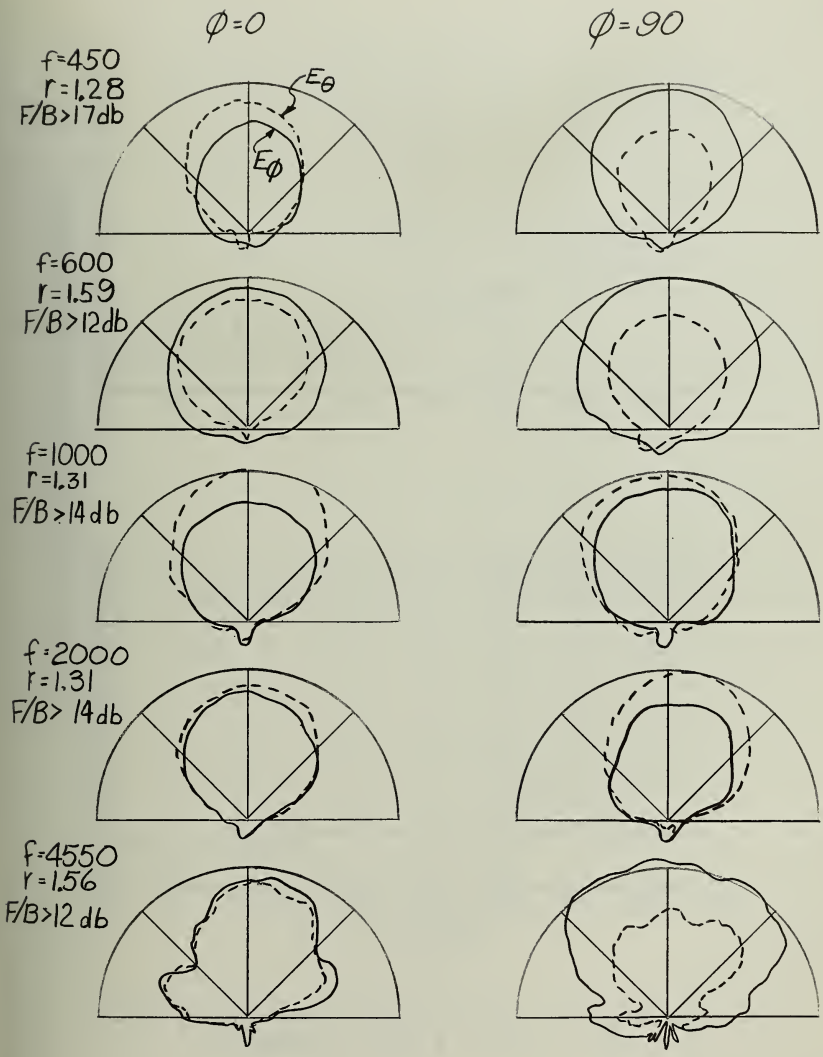

FIGURE 7 RADIATION PATTERN OF BALANCED CONICAL EQUIANGULAR SPIRAL

L = 150
D = 25.4 cm
H = 42.5 cm
r = axial ratio

b = .078
K = .85
$\psi = 30^{\circ}$

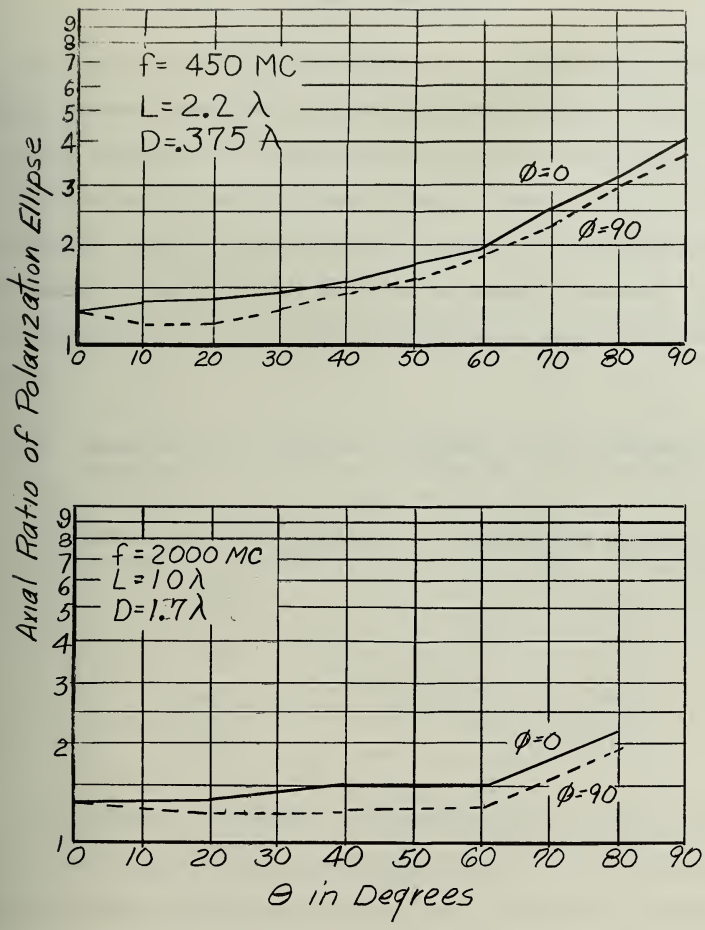

FIGURE 8 POLARIZATION OF THE RADIATED E FIELD OFF AXIS OF ANTENNA, $\psi = 30^{\circ}$, K = .85, b = .078

5. INPUT IMPEDANCE

The input impedance of the antennas remains relatively constant over a wider frequency range than the useable pattern bandwidth. The standing wave ratio presented to a 50 ohm line by an antenna with $\psi = 20^{\circ}$, K = .925, and fed with RG 141/U cable is shown in Fig. 9 over a 20 to 1 variation in frequency. The mean impedance level appears to slowly decrease with decreasing cone angle. The variation in the measured impedance over the frequency range from .5 to 2.5 Kmc is indicated in Table 2 for four cone angles.

Table 2 Measured input impedance of balanced conical antennas as a function of ψ. (K = .925, L = 150 cm, b = (a Sin $\psi/2$)

ψ	APPROXIMATE MEAN IMPEDANCE	MAXIMUM SWR REFERRED TO MEAN
20°	129 Ω	1.9:1
30	147	1.9:1
60	153	1.95:1
180	164	2.1:1

The impedance is influenced by the construction at the terminal region. Since these antennas were fed with a coaxial cable of .140 inch diameter, this cable dominates the terminal region and contributes to the mean impedance level. However, this appears to be the only practical method of feeding these structures if the full bandwidth potentiality is to be realized. Hence the input impedance with a practical size feed cable bonded to the arms is of interest. It may be expected to change with a change in cable but its stability with frequency is apparent.

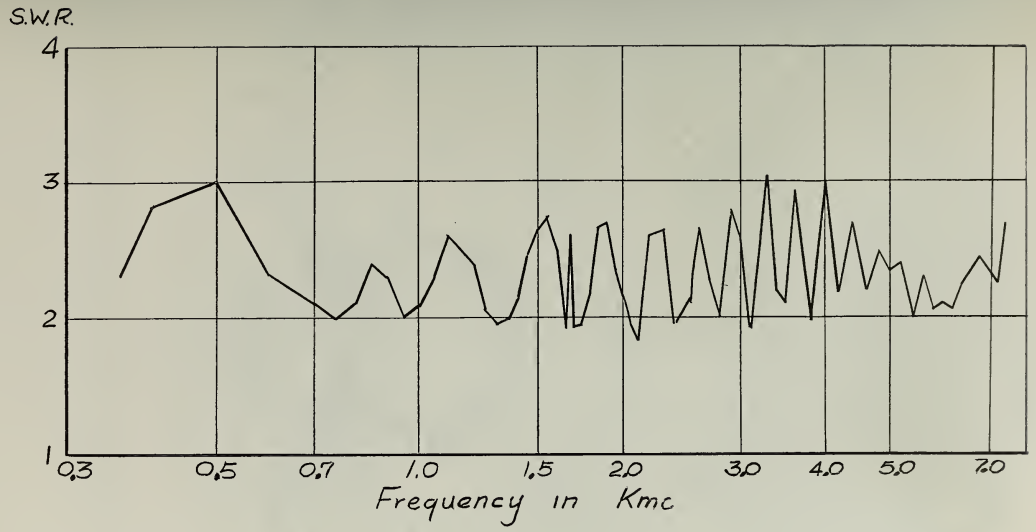

FIGURE 9 STANDING WAVE RATIO ON 50 ohm LINE TERMINATED WITH BALANCED CONICAL ANTENNA (ψ = 20°, K = .925, b = .053, L = 150 cm, RG 141/u Cable.)

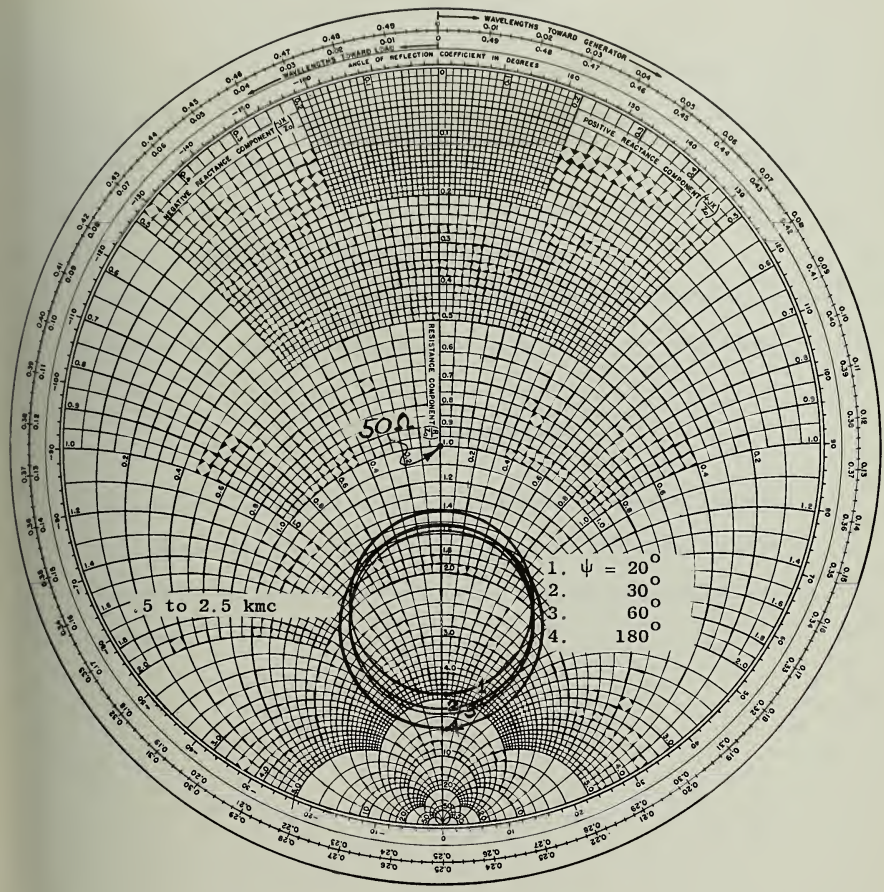

FIGURE 10 APPROXIMATE BOUNDARY CIRCLES OF IMPEDANCE LOCI AS A FUNCTION OF ψ

$K = .925, \quad L = 150 \text{ cm}, \quad b = (.303 \sin \frac{\psi}{2})$

6. CONCLUSIONS

An experimental investigation of the balanced equiangular spiral antenna projected on a conical surface has shown that unidirectional circularly polarized single lobe radiation patterns may be obtained over bandwidths in excess of 10 to 1. The input impedance remains relatively constant over the pattern bandwidth.

The antennas are of practical form and may be constructed of metal arms formed on a conical surface or by printed circuit techniques.

7. ACKNOWLEDGEMENT

The author is pleased to acknowledge helpful discussions with Dr. P.E. Mayes and the assistance of R.L. Jones and other members of the University of Illinois Antenna Laboratory who contributed to the measurements.

DISTRIBUTION LIST

One copy each unless otherwise indicated

Armed Services Technical Information Agency
Arlington Hall Station
Arlington 12, Virginia 3 & 1 repro

Commander
Wright Air Development Center
Wright-Patterson Air Force Base, Ohio
Attn: WCLRS-6, Mr. W.J. Portune 3 copies

Commander
Wright Air Development Center
Wright-Patterson Air Force Base, Ohio
Attn: WCLNQ-4, Mr. N. Draganjac

Commander
Wright Air Development Center
Wright-Patterson Air Force Base, Ohio
Attn: WCOSI, Library

Director
Evans Signal Laboratory
Belmar, New Jersey
Attn: Technical Document Center

Commander
U.S. Naval Air Test Center
Attn: ET-315
Antenna Section
Patuxent River, Maryland

Chief
Bureau of Ordnance
Department of the Navy
Attn: Mr. C.H. Jackson, Code Re 9a
Washington 25, D.C.

Commander
Hq. A.F. Cambridge Research Center
Air Research and Development Command
Laurence G. Hanscom Field
Bedford, Massachusetts
Attn: CRRD, R.E. Hiatt

Commander
Air Force Missile Test Center
Patrick Air Force Base, Florida
Attn: Technical Library

Director
Ballistics Research Lab.
Aberdeen Proving Ground, Maryland
Attn: Ballistics Measurement Lab.

Office of the Chief Signal Officer
Attn: SIGNET-5
Eng. & Technical Division
Washington 25, D.C.

Commander
Rome Air Development Center
ATTN: RCERA-1 D. Mather
Griffiss Air Force Base
Rome, N.Y.

Airborne Instruments Lab., Inc.
Attn: Dr. E.G. Fubini
Antenna Section
160 Old Country Road
Mineola, New York
M/F Contract AF33(616)-2143

Andrew Alford Consulting Engrs.
Attn: Dr. A. Alford
299 Atlantic Ave.
Boston 10, Massachusetts
M/F Contract AF33(038)-23700

Bell Aircraft Corporation
Attn: Mr. J.D. Shantz
Buffalo 5, New York
M/F Contract W-33(038)-14169

Chief
Bureau of Ships
Department of the Navy
Attn: Code 838D, L.E. Shoemaker
Washington 25, D.C.

DISTRIBUTION LIST (CONT.)

One copy each unless other wise indicated

Director
Naval Research Laboratory
Attn: Dr. J.I. Bohnert
Anacostia
Washington 25, D.C.

National Bureau of Standards
Department of Commerce
Attn: Dr. A.G. McNish
Washington 25, D.C.

Director
U.S. Navy Electronics Lab.
Point Loma
San Diego 52, California

Commander
USA White Sands Signal Agency
White Sands Proving Command
Attn: SIGWS-FC-02
White Sands, N.M.

Consolidated Vultee Aircraft Corp.
Fort Worth Division
Attn: C.R. Curnutt
Fort Worth, Texas
M/F Contract AF33(038)-21117

Dorne & Margolin
29 New York Ave.
Westbury
Long Island, New York
M/F Contract AF33(616)-2037

Douglas Aircraft Company, Inc.
Long Beach Plant
Attn: J.C. Buckwalter
Long Beach 1, California
M/F Contract AF33(600)-25669

Boeing Airplane Company
Attn: F. Bushman
7755 Marginal Way
Seattle, Washington
M/F Contract AF33(038)-31096

Chance-Vought Aircraft Division
United Aircraft Corporation
Attn: Mr. F.N. Kickerman
Thru: BuAer Representative
Dallas, Texas

Consolidated-Vultee Aircraft Corp
Attn: Mr. R.E. Honer
P.O. Box 1950
San Diego 12, California
M/F Contract AF33(600)-26530

Grumman Aircraft Engineering Corp
Attn: J.S. Erickson
Asst. Chief, Avionics Dept.
Bethpage
Long Island, New York
M/F Contract NOa(s) 51-118

Hallicrafters Corporation
Attn: Norman Foot
440 W. 5th Avenue
Chicago, Illinois
M/F Contract AF33(600)-26117

Hoffman Laboratories Division
Attn: J.D. Funderburg,
Counter Measures Section
Los Angeles, California
M/F Contract AF33(604)-17231

Hughes Aircraft Corporation
Division of Hughes Tool Company
Attn: D. Adcock
Florence Avenue at Teale
Culver City, California
M/F Contract AF33(600)-27615

Illinois, University of
Head, Department of Elec. Eng.
Attn: Dr. E.C. Jordan
Urbana, Illinois

DISTRIBUTION LIST (CONT.)

One copy each unless otherwise indicated

Johns Hopkins University
Radiation Laboratory
Attn: Librarian
1315 St. Paul Street
Baltimore 2, Maryland
M/F Contract AF33(616)-68

Glen L. Martin Company
Baltimore 3, Maryland
M/F Contract AF33(600)-21703

McDonnell Aircraft Corporation
Attn: Engineering Library
Lambert Municipal Airport
St. Louis 21, Missouri
M/F Contract AF33(600)-8743

Michigan, University of
Aeronautical Research Center
Attn: Dr. L. Cutrona
Willow Run Airport
Ypsilanti, Michigan
M/F Contract AF33(038)-21573

Massachusetts Institute of Tech.
Attn: Prof. H.J. Zimmermann
Research Lab. of Electronics
Cambridge, Massachusetts
M/F Contract AF33(616)-2107

North American Aviation, Inc.
Los Angeles International Airport
Attn: Mr. Dave Mason
Engineering Data Section
Los Angeles 45, California
M/F Contract AF33(038)-18319

Northrop Aircraft, Incorporated
Attn: Northrop Library
Dept. 2135
Hawthorne, California
M/F Contract AF33(600)-22313

Radioplane Company
Van Nuys, California
M/F Contract AF33(600)-23893

Lockheed Aircraft Corporation
Attn: C.L. Johnson
P.O. Box 55
Burbank, California
M/F NOa(s)-52-763

Raytheon Manufacturing Company
Attn: Robert Borts
Wayland Laboratory, Wayland, Mass.

Republic Aviation Corporation
Attn: Engineering Library
Farmingdale
Long Island, New York
M/F Contract AF33(038)-14810

Sperry Gyroscope Company
Attn: Mr. B. Berkowitz
Great Neck
Long Island, New York
M/F Contract AF33(038)-14524

Temco Aircraft Corp
Attn: Mr. George Cramer
Garland, Texas
Contract AF33(600)-21714

Farnsworth Electronics Co.
Attn: George Giffin
Ft. Wayne, Indiana
M/F Contract AF33(600)-25523

North American Aviation, Inc.
4300 E. Fifth Ave.
Columbus, Ohio
Attn: Mr. James D. Leonard
Contract NOa(s)-54-323

Westinghouse Electric Corporation
Air Arm Division
Attn: Mr. P.D. Newhouser
Development Engineering
Friendship Airport, Maryland
Contract AF33(600)-27852

DISTRIBUTION LIST (CONT.)

One copy each unless otherwise indicated

Ohio State Univ. Research Foundation
Attn: Dr. T.C. Tice
310 Administration Bldg.
Ohio State University
Columbus 10, Ohio
M/F Contract AF33(616)-3353

Air Force Development Field
Representative
Attn: Capt. Carl B. Ausfahl
Code 1010
Naval Research Laboratory
Washington 25, D.C.

Chief of Naval Research
Department of the Navy
Attn: Mr. Harry Harrison
Code 427, Room 2604
Bldg. T-3
Washington 25, D.C.

Beech Aircraft Corporation
Attn: Chief Engineer
6600 E. Central Avenue
Wichita 1, Kansas
M/F Contract AF33(600)-20910

Land-Air, Incorporated
Cheyenne Division
Attn: Mr. R.J. Klessig
Chief Engineer
Cheyenne, Wyoming
M/F Contract AF33(600)-22964

Director, National Security Agency
RADE 1GM, Attn: Lt. Manning
Washington 25, D.C.

Melpar, Incorporated
3000 Arlington Blvd.
Falls Church, Virginia
Attn: K.S. Kelleher

Naval Air Missile Test Center
Point Mugu, California
Attn: Antenna Section

Fairchild Engine & Airplane Corp
Fairchild Airplane Division
Attn: L. Fahnestock
Hagerstown, Maryland
M/F Contract AF33(038)-18499

Federal Telecommunications Lab.
Attn: Mr. A. Kandoian
500 Washington Avenue
Nutley 10, New Jersey
M/F Contract AF33(616)-3071

Ryan Aeronautical Company
Lindbergh Drive
San Diego 12, California
M/F Contract W-33(038)-ac-21370

Republic Aviation Corporation
Attn: Mr. Thatcher
Hicksville, Long Island, New York
M/F Contract AF18(600)-1602

General Electric Co.
French Road
Utica, New York
Attn: Mr. Grimm, LMEED
M/F Contract AF33(600)-30632

D.E. Royal
The Ramo-Wooldridge Corp
Communications Division
P.O. Box 45444
Airport Station
Los Angeles 45, California

Motorola, Inc.
Defense Systems Lab.
Attn: Mr. A.W. Boekelheide
3102 N. 56th Street
Phoenix, Arizona
M/F Contract NOa(s)-53-492-c

Stanford Research Institute
Southern California Laboratories
Attn: Document Librarian
820 Mission Street
South Pasadena, California
Contract AF19(604)-1296

DISTRIBUTION LIST (CONT.)

One copy each unless otherwise indicated

Prof. J.R. Whinnery
Dept. of Electrical Engineering
University of California
Berkeley, California

Professor Morris Kline
Mathematics Research Group
New York University
45 Astor Place
New York, N.Y.

Prof. A.A. Oliner
Microwave Research Institute
Polytechnic Institute of Brooklyn
55 Johnson Street - Third Floor
Brooklyn, New York

Dr. C.H. Papas
Dept. of Electrical Engineering
California Institute of Technology
Pasadena, California

Electronics Research Laboratory
Stanford University
Stanford, California
Attn: Dr. F.E. Terman

Radio Corporation of America
R.C.A. Laboratories Division
Princeton, New Jersey

Electrical Engineering Res. Lab.
University of Texas
Box 8026, University Station
Austin, Texas

Dr. Robert Hansen
8356 Chase Avenue
Los Angeles 45, California

Technical Library
Bell Telephone Laboratories
463 West St.
New York 14, N.Y.

Dr. R.E. Beam
Microwave Laboratory
Northwestern University
Evanston, Illinois

Department of Electrical Engineering
Cornell University
Ithaca, New York
Attn: Dr. H.G. Booker

Applied Physics Laboratory
Johns Hopkins University
8621 Georgia Avenue
Silver Spring, Maryland

Exchange and Gift Division
The Library of Congress
Washington 25, D.C.

Ennis Kuhlman
c/o McDonnell Aircraft
P.O. Box 516
Lambert Municipal Airport
St. Louis 21, Mo.

Mr. Roger Battie
Supervisor, Technical Liaison
Sylvania Electric Products, Inc.
Electronic Systems Division
P.O. Box 188
Mountain View, California

Physical Science Lab.
New Mexico College of A and MA
State College, New Mexico
Attn: R. Dressel

Technical Reports Collection
303 A Pierce Hall
Harvard University
Cambridge 38, Mass.
Attn: Mrs. E.L. Hufschmidt, Librarian

Dr. R.H. DuHamel
Collins Radio Company
Cedar Rapids, Iowa

DISTRIBUTION LIST (CONT.)

One copy each unless otherwise indicated

Dr. R.F. Hyneman
5116 Marburn Avenue
Los Angeles 45, California

Director
Air University Library
Attn: AUL-8489
Maxwell AFB, Alabama

Stanford Research Institute
Documents Center
Menlo Park, California
Attn: Mary Lou Fields, Acquisitions

Dr. Harry Letaw, Jr.
Research Division
Raytheon Manufacturing Co.
Waltham 54, Massachusetts

Canoga Corporation
5955 Sepulveda Blvd.
P.O. Box 550
Van Nuys, California
M/F Contract AF08(603)-4327

Radiation, Inc.
Technical Library Section
Attn: Antenna Department
Melbourne, Florida
M/F Contract AF33(600)-36705

Westinghouse Electric Corporation
Attn: Electronics Division
Friendship International Airport
Box 746
Baltimore 3, Maryland
M/F Contract AF33(600)-27852

North American Aviation, Inc.
Aerophysics Laboratory
Attn: Dr. J.A. Marsh
12214 Lakewood Blvd
Downey, California
M/F Contract AF33(038)-18319

Chief
Bureau of Aeronautics
Department of the Navy
Attn: Aer-EL-931